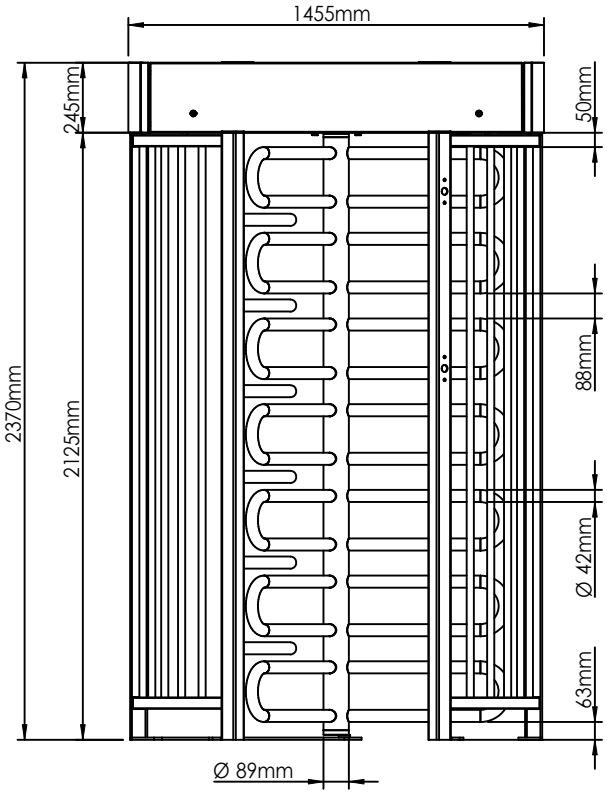

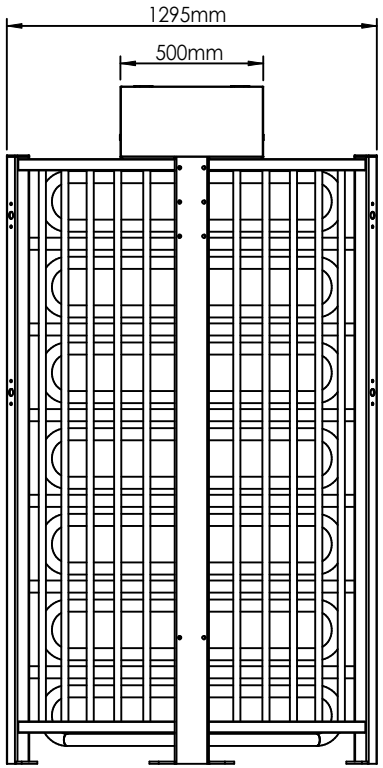

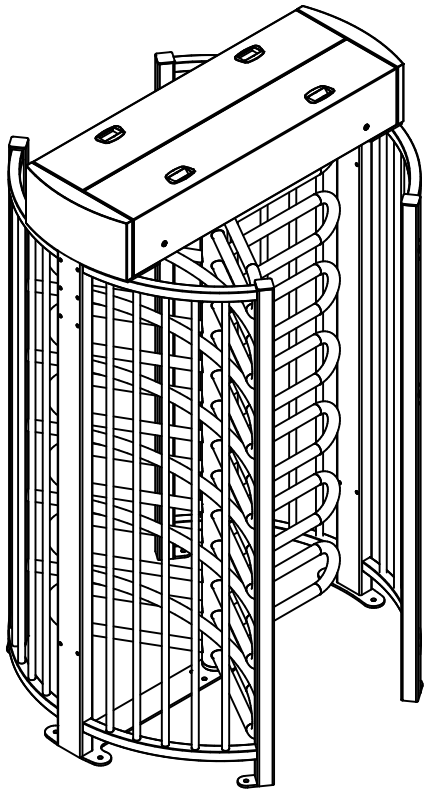

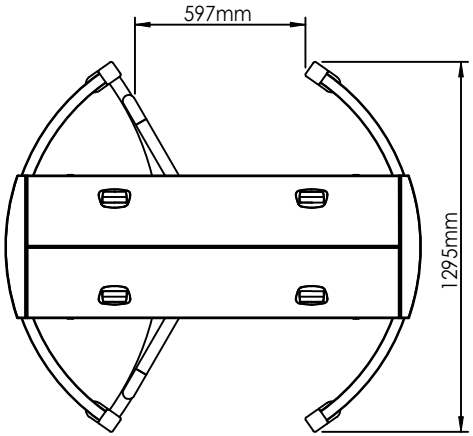

TOP VIEW

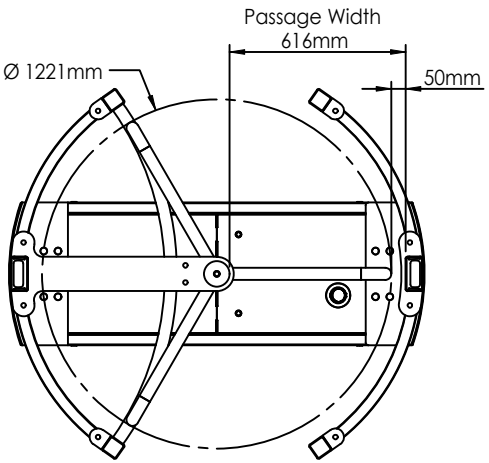

BOTTOM VIEW

ASSA ABLOY

DRAWING NAME: FT 400			
DRAWING NUMBER:			
DRAWN	DATE	SIZE	REV
H.I.	03.02.2026	A4	Rev.002
		SHEET: 1 OF 1	